HYDRO 1000

RELIABLE DEEP WATER PHOTOGRAMMETRY FOR CHALLENGING SUBSEA ENVIRONMENTS



IVM TECHNOLOGIES

subtop
PARTENAIRE DISTRIBUTEUR
INTÉGRATION VENTE LOCATION
www.subtop.fr
contact@subtop.fr
01 64 55 80 40



APPLICATIONS FOR HYDRO 1000

- Wellhead and X-mas tree inspection
- Deep water spool metrology
- Wrecks inspections

The Hydro 1000 is a deep-water photogrammetry unit engineered for ease of use and seamless deployment while ensuring data reliability. This unit leverages our technology and its benefits, including millimetric accuracy and performance in low-visibility conditions. Optimized for deep-water environments, the Hydro 1000 is built with pressure-resistant materials such as titanium to control payload weight.

The Hydro 1000 helps you reduce inspection time and operational costs and stay on track even under tight and changing timelines. It is compatible with a wide range of ROVs, from Light Work Class to Work Class.



3D model - Mooring line inspected with Hydro 1000

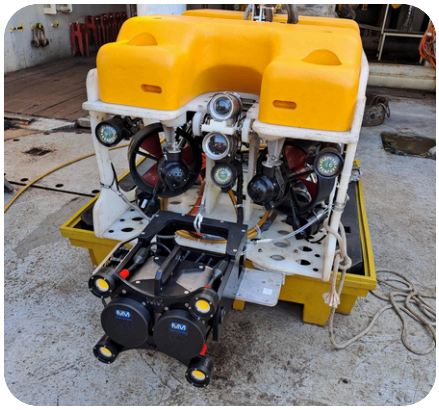

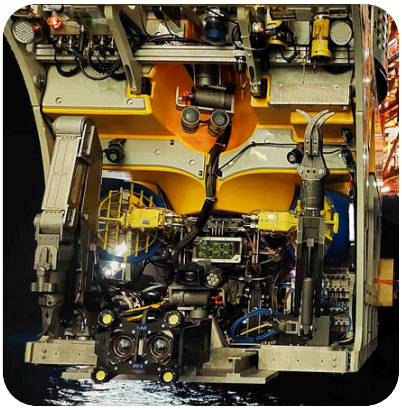

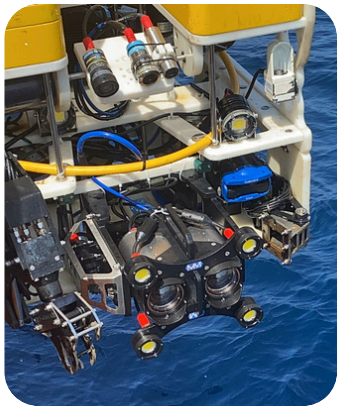

SPECIFICATIONS

Mechanical & Environment

Dimensions (with cables)	288 x 338 x 410 mm
Operating depth	1000 msw
Operating ambient temperature	0 to 30°
Weight (air / water)	17 / 7.5 kg
Material	Titanium
Connectors	SubConn Micro Circular
ROV Integration	Light Work Class & Work Class

Electrical

Voltage requirement	48 VDC
Power requirement	150 W
Data output	1 Gbps Ethernet | 10/100 Mbps
Data storage	2 Tb

Vision

Field of view (V / H)	63°/ 79°
Resolution	2 x 12 Mpx
Frame rate	Visualization: 20 FPS | Recording: 4 FPS
Lighting	80 000 lumens

IVM Equipment compatibility

Add-on products	Skid, power converter, tilt
IVM SLAM	Yes

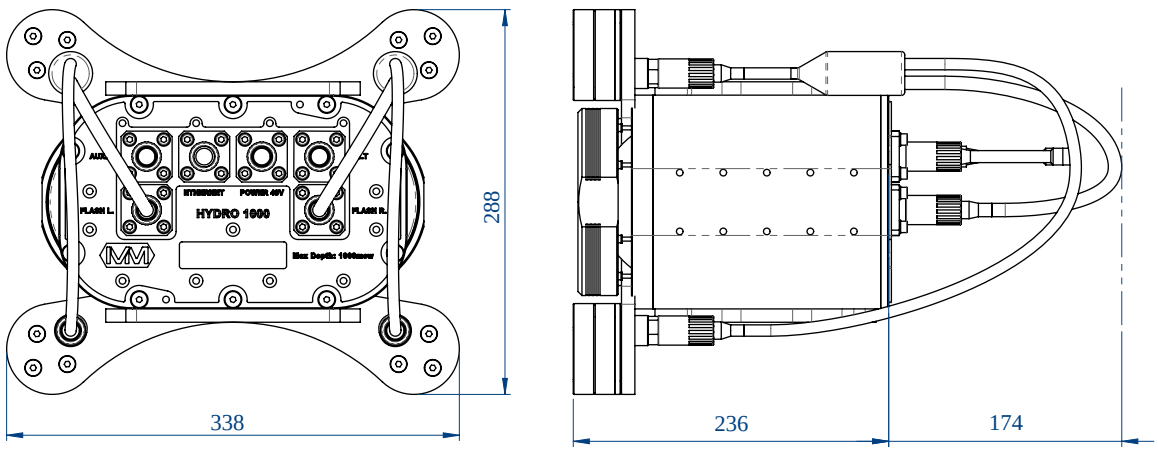

IVM TECHNOLOGIES

At IVM Technologies we develop, design and build 3D reconstruction solutions using high accuracy underwater photogrammetry technology. Our offering goes beyond cameras, we provide components needed to assemble a customized kit tailored to your operations and equipment. To better serve our clients, we have also developed a comprehensive service offering around our products, helping them save time, reduce costs, and gain unmatched insights into their subsea assets.

www.ivm-technologies.com

IVM Technologies SAS