HYDRO 100

LIGHT, COMPACT AND HIGHLY INTEGRABLE



IVM TECHNOLOGIES

subtop
PARTENAIRE DISTRIBUTEUR
INTÉGRATION VENTE LOCATION
www.subtop.fr
contact@subtop.fr
01 64 55 80 40



APPLICATIONS FOR HYDRO 100

- Lake quay inspection
- Jacket inspection in the Persian Gulf
- Indoor factory tank inspection
- CPS inspection

Compact and lightweight, it is designed to be easily integrated onto observation and inspection ROVs, filling a gap in the subsea market for accessible and high-quality 3D modeling tools. Its affordability makes it the most appealing option for research institutions, universities and newcomers to the subsea survey field. More than an answer to a specific audience, it also addresses specific geographic and industrial needs, being a solution for surveys in inland waters and industrial tanks. Its key advantage lies in the availability of a diver-held kit, offering greater flexibility in the field.



3D model - Quay wall inspected with Hydro 100







SPECIFICATIONS

Mechanical & Environment

Dimensions (with cables)	284 x 290 x 140 mm
Operating depth	100 msw
Operating ambient temperature	0 to 30°
Weight (air / water)	4.1 / 0.1 kg
Material	Hard Anodized Aluminium
Connectors	BlueTrail Cobalt
ROV Integration	Mini ROVs & Observation Class

Electrical

Voltage requirement	9-36 VDC
Power requirement	120 W
Data output	1 Gbps Ethernet | 10/100 Mbps
Data storage	2 Tb

Vision

Field of view (V / H)	61° / 82°
Resolution	2 x 5 Mpx
Frame rate	Visualization: 20 FPS | Recording: 4 FPS
Lighting	35 000 lumens

IVM Equipment compatibility

Add-on products	Skid, diver kit
IVM SLAM	Yes

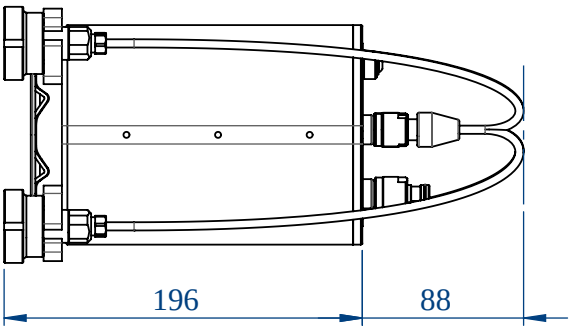

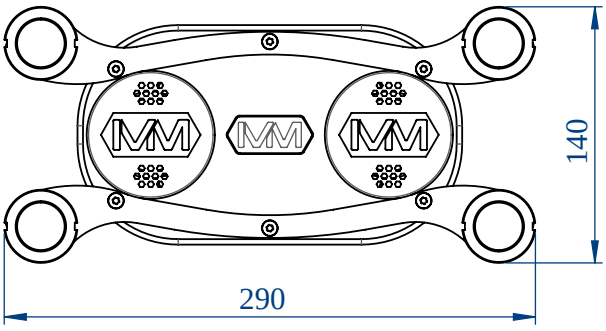

IVM TECHNOLOGIES

At IVM Technologies we develop, design and build 3D reconstruction solutions using high accuracy underwater photogrammetry technology. Our offering goes beyond cameras, we provide components needed to assemble a customized kit tailored to your operations and equipment. To better serve our clients, we have also developed a comprehensive service offering around our products, helping them save time, reduce costs, and gain unmatched insights into their subsea assets.

www.ivm-technologies.com

IVM Technologies SAS