HYDRO 300

VERSATILE STEREO PHOTOGRAMMETRY CAMERA FOR SUBSEA INSPECTIONS



IVM TECHNOLOGIES

subtop
PARTENAIRE DISTRIBUTEUR
INTÉGRATION VENTE LOCATION
www.subtop.fr
contact@subtop.fr
01 64 55 80 40



APPLICATIONS FOR HYDRO 300

- High-turbidity dam inspection
- Shallow water spool metrology
- Riser base inspection
- Mooring line dimensional control

The Hydro 300 is a robust photogrammetry unit designed for shallow water and with a maximum depth rating of 300 msw, this unit gives you access to a larger range of subsea assets. Its cameras capture high-resolution still images enabling the generation of 3D models with millimetric precision. Equipped with integrated 80 000-lumens flashes, the Hydro 300 performs perfectly in low-visibility conditions.
Engineered for versatility, this unit is compatible with Observation and Work Class ROVs, making it a powerful ally for your subsea inspections.



3D model - Hawker Siddeley HS-748 wreck inspected with Hydro 300







SPECIFICATIONS

Mechanical & Environment

Dimensions (with cables)	288 x 338 x 324 mm
Operating depth	300 msw
Operating ambient temperature	0 to 30°
Weight (air / water)	11.2 / 2.2 kg
Material	Hard Anodized Aluminium
Connectors	BlueTrail Cobalt
ROV Integration	Observation to Work Class

Electrical

Voltage requirement	48 VDC
Power requirement	150 W
Data output	1 Gbps Ethernet | 10/100 Mbps
Data storage	2 Tb

Vision

Field of view (V / H)	63°/ 79°
Resolution	2 x 12 Mpx
Frame rate	Visualization: 20 FPS | Recording: 4 FPS
Lighting	80 000 lumens

IVM Equipment compatibility

Add-on products	Skid, power converter, tilt
IVM SLAM	Yes

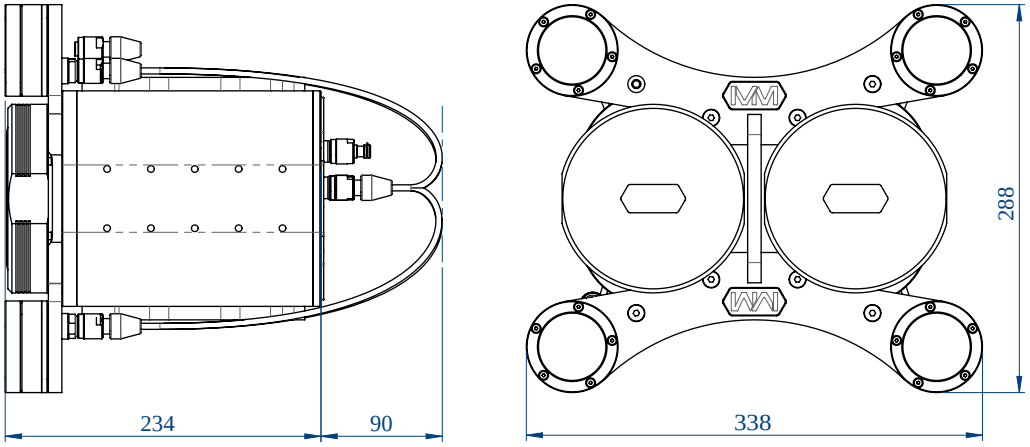

IVM TECHNOLOGIES

At IVM Technologies we develop, design and build 3D reconstruction solutions using high accuracy underwater photogrammetry technology. Our offering goes beyond cameras, we provide components needed to assemble a customized kit tailored to your operations and equipment. To better serve our clients, we have also developed a comprehensive service offering around our products, helping them save time, reduce costs, and gain unmatched insights into their subsea assets.

www.ivm-technologies.com

IVM Technologies SAS