HYDRO 6000

DIVE DEEPER WITHOUT MISSING A SINGLE DETAIL



IVM TECHNOLOGIES

subtop
PARTENAIRE DISTRIBUTEUR
INTÉGRATION VENTE LOCATION
www.subtop.fr
contact@subtop.fr
01 64 55 80 40



APPLICATIONS FOR HYDRO 6000

- Wrecks inspections
- Deep water oil & gas platform inspections
- Pipeline inspections

The Hydro 6000 is an ultra-deep water photogrammetry unit created to push the boundaries of standard operational depths. Reaching into the deepest waters, with a depth rating of 6000 msw, it enables data capture in the most demanding subsea environments.
Built on proven technology and supported by our extensive expertise, this unit offers the same ease of use, seamless integration and millimetric accuracy that define the entire Hydro Series range. It is compatible with Light Work Class and Work Class ROVs.

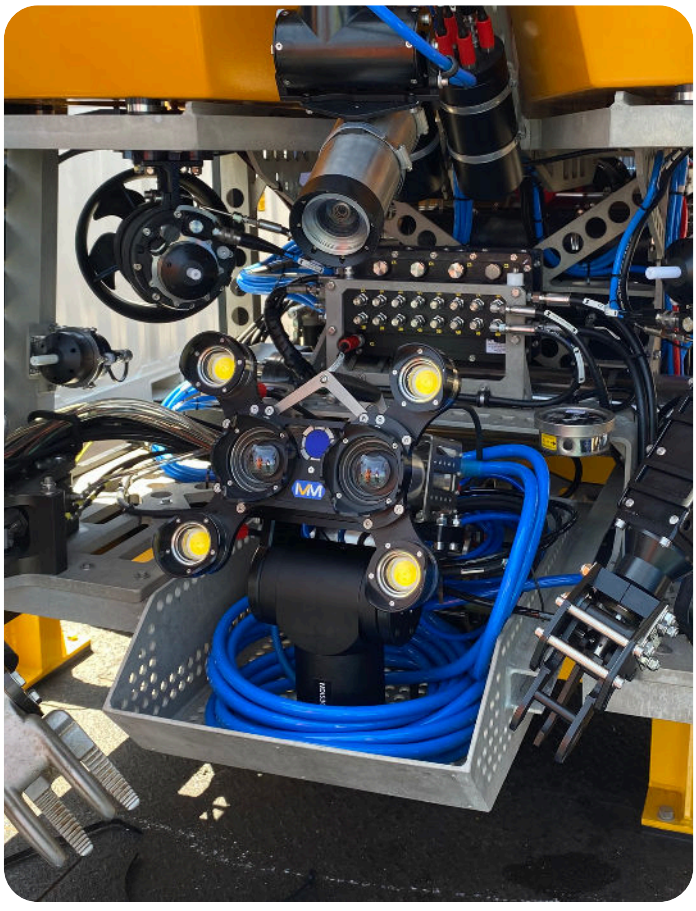



Camera

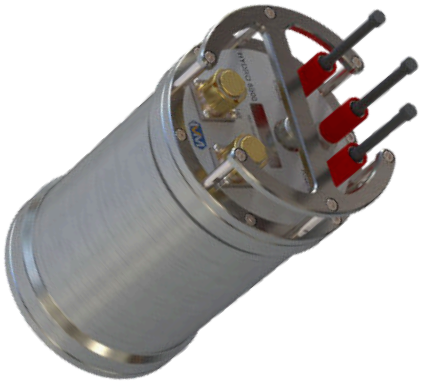

POD

SPECIFICATIONS

GENERAL

Mechanical & Environment

Operating depth	6000 msw
Operating ambient temperature	0 to 30°
Material	Titanium
Connectors	SubConn Micro Circular
ROV Integration	Light Work Class & Work Class

IVM Equipment compatibility

Add-on products	Skid, power converter, tilt
IVM SLAM	Yes

CAMERA

Mechanical & Environment

Dimensions (w cables)	355 x 300 x 342 mm
Weight (air / water)	10.4 / 6.3 kg

Vision

Field of view (V / H)	63° / 79°
Resolution	2 x 12 Mpx
Frame rate	Visualization: 20 FPS Recording: 4 FPS
Lighting	80 000 lumens

POD

Mechanical & Environment

Dimensions (w cables)	Ø190 x 326 mm
Weight (air / water)	14.3 / 7.2 kg

Electrical

Voltage requirement	48 VDC
Power requirement	150 W
Data output	1 Gbps Ethernet 10/100 Mbps
Data storage	2 Tb

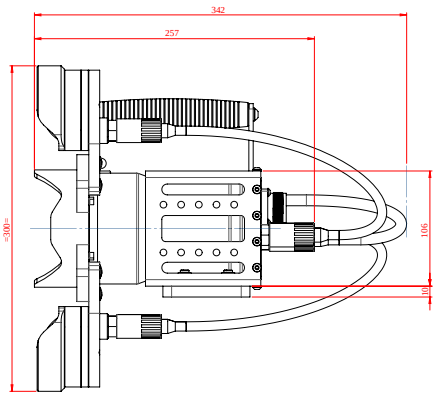

Camera

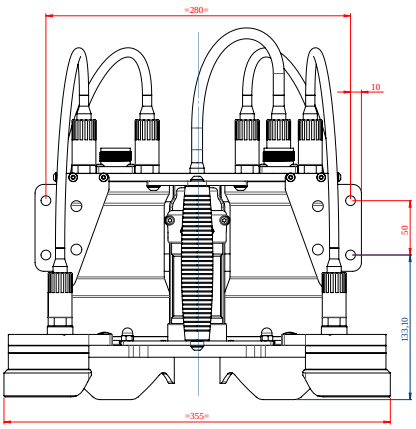

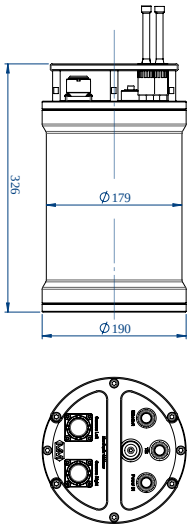

POD

IVM TECHNOLOGIES

At IVM Technologies we develop, design and build 3D reconstruction solutions using high accuracy underwater photogrammetry technology. Our offering goes beyond cameras, we provide components needed to assemble a customized kit tailored to your operations and equipment. To better serve our clients, we have also developed a comprehensive service offering around our products, helping them save time, reduce costs, and gain unmatched insights into their subsea assets.

www.ivm-technologies.com

IVM Technologies SAS